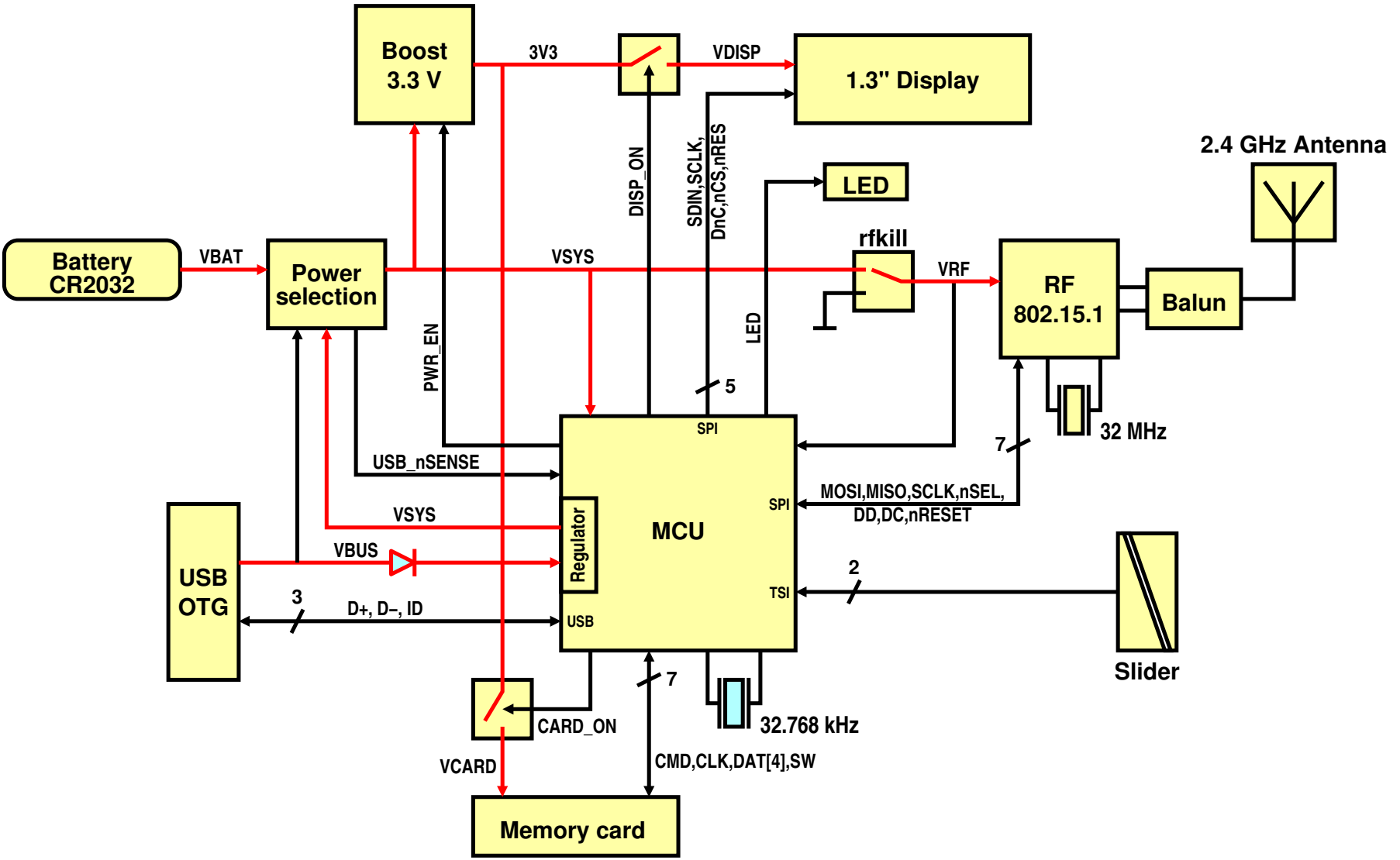
Boost
3.3 V
3V3
VDISP
1.3" Display
DISP_ON
SDIN,SCLK,
DnC,nCS,nRES
LED
2.4 GHz Antenna
Battery
CR2032
VBAT
Power
selection
VSYS
rfkill
VRF
RF
802.15.1
Balun
PWR_EN
LED
5
SPI
32 MHz
7
USB_nSENSE
MOSI,MISO,SCLK,nSEL,
DD,DC,nRESET
SPI
VSYS
Regulator
MCU
USB
OTG
VBUS
2
TSI
3
D+, D–, ID
USB
Slider
7
CARD_ON
32.768 kHz
VCARD
CMD,CLK,DAT[4],SW
Memory card