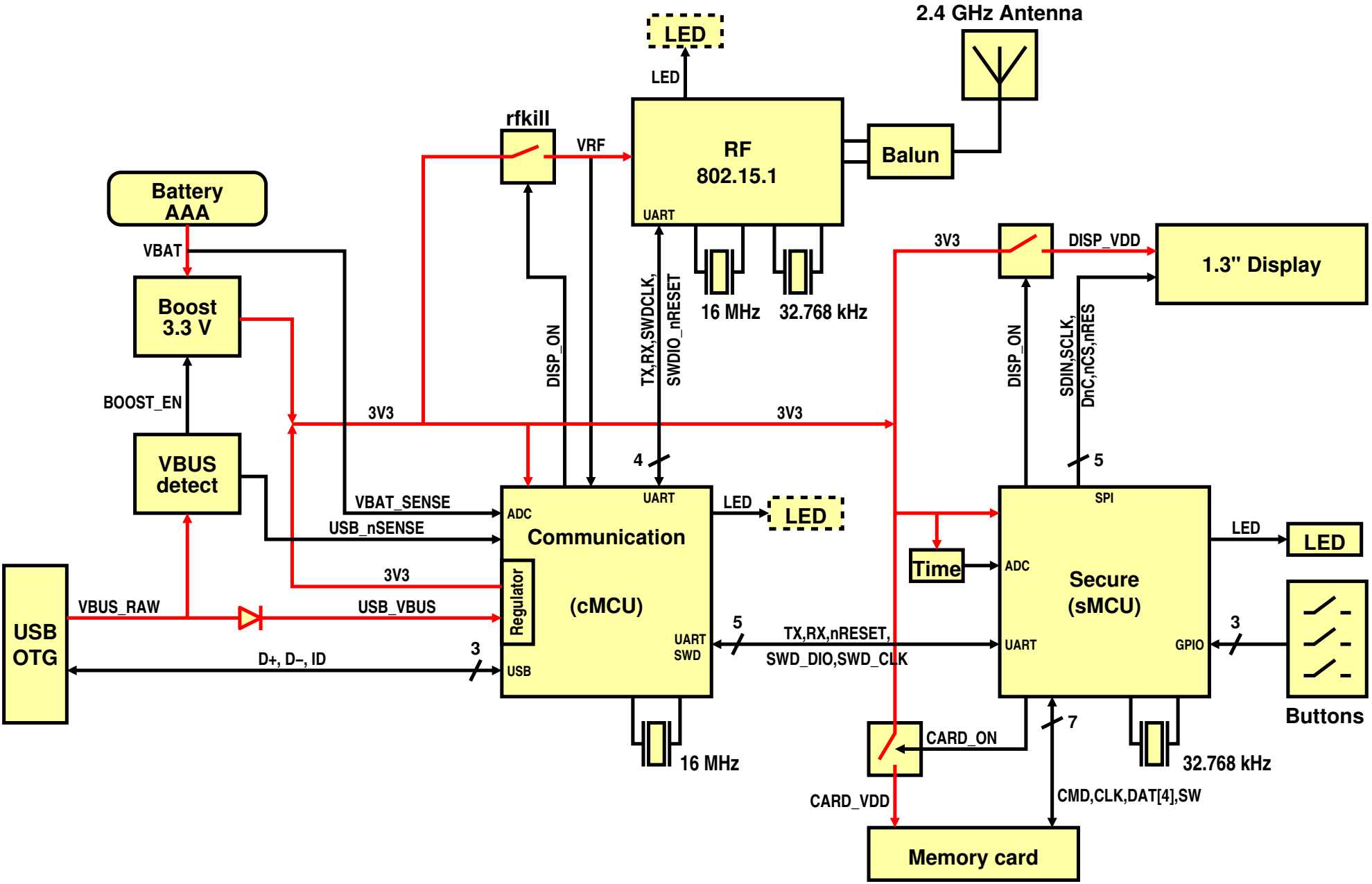
2.4 GHz Antenna
LED
LED
rfkill
VRF
RF
802.15.1
Balun
UART
Battery
AAA
VBAT
Boost
3.3 V
BOOST_EN
VBUS
detect
3V3
DISP_ON
TX,RX,SWDCLK,
SWDIO_nRESET
16 MHz
32.768 kHz
3V3
DISP_VDD
1.3" Display
DISP_ON
SDIN,SCLK,
DnC,nCS,nRES
3V3
4
5
VBAT_SENSE
USB_nSENSE
ADC
UART
Communication
(cMCU)
Regulator
USB
LED
LED
3V3
VBUS_RAW
USB_VBUS
USB
OTG
D+, D–, ID
3
5
UART
SWD
TX,RX,nRESET,
SWD_DIO,SWD_CLK
16 MHz
SPI
Time
ADC
Secure
(sMCU)
UART
GPIO
LED
LED
3
Buttons
CARD_ON
7
32.768 kHz
CARD_VDD
CMD,CLK,DAT[4],SW
Memory card